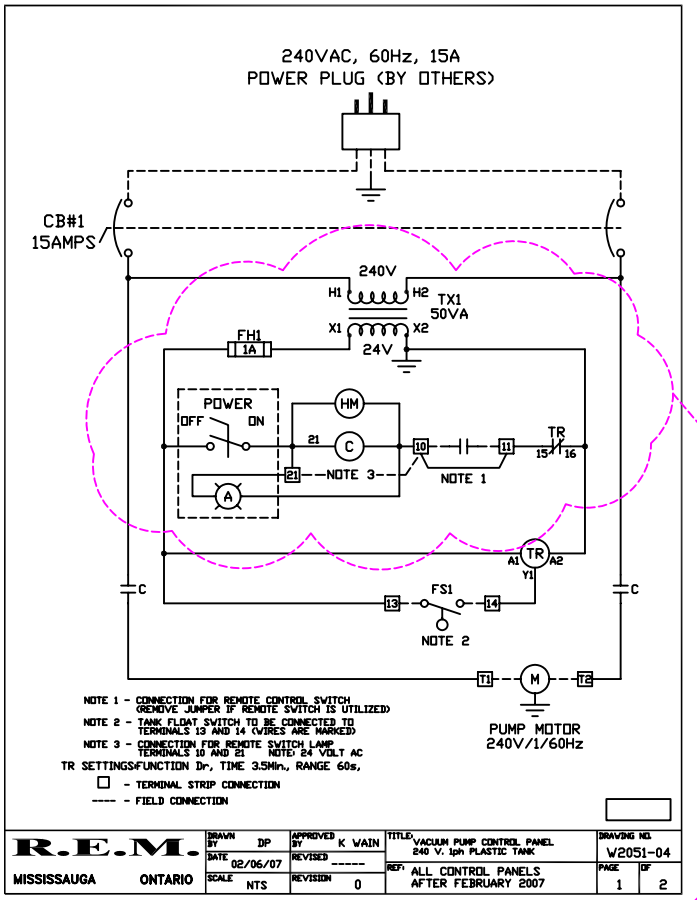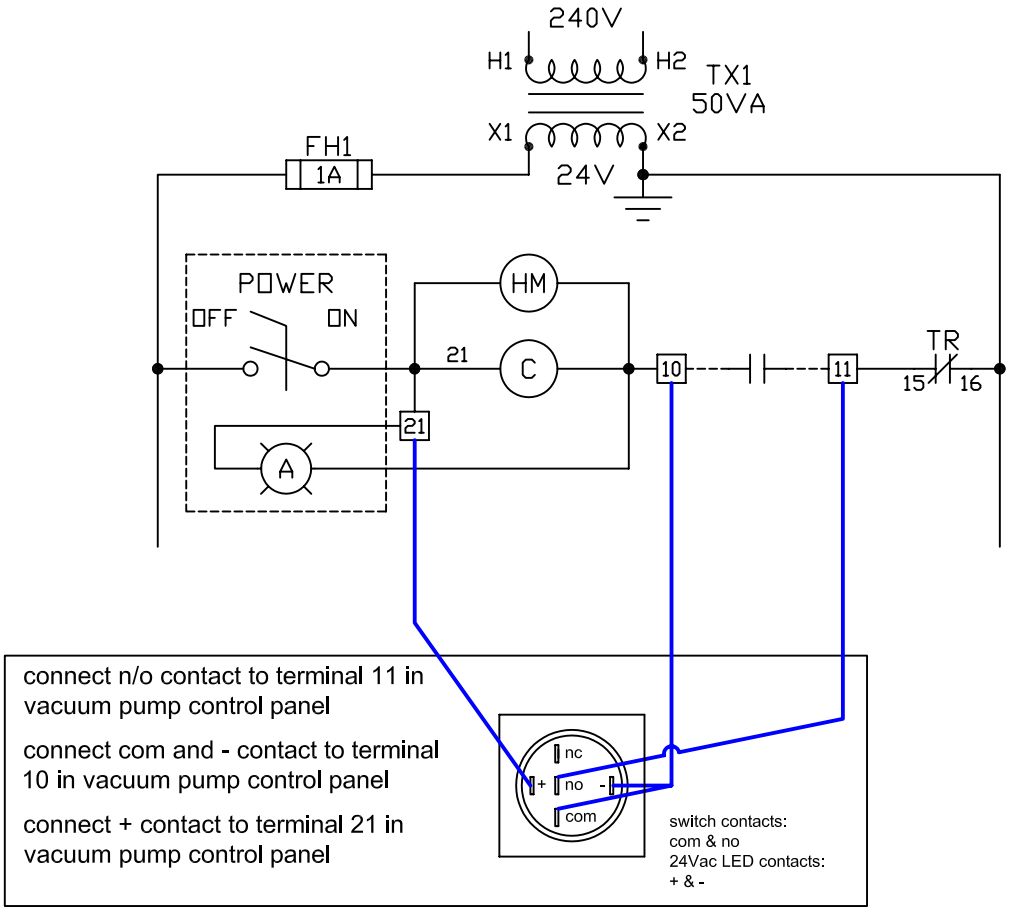Remote Switch Electrical Connections to Base Vac Dental Vacuum System